CMLR SET-UP SHEET WWW.CMLDISTRIBUTION.CO.UK

HYPER 8 PRO — 1/8 SCALE PRO RACING BUGGY

Factory Setup Sheet

Date	02 / 03 / 2008
Driver	Graham Alsop
Track	Slough

Engine	RB WS7 L2G	Gasket	std mm	Plug	ODO99	Muffler	Hobao	Fuel	Byron 30 GEN2

Clutch ball	13T	14T	Other T	Spur gear	46 T	Other T	Shoes	2 Plastic 1 alum	Spring 1 mm

Diff	Front:	LSD	Oil # 5000	Center:	LSD	Oil # 6000	Rear:	LSD	Oil # 1300

Front Suspension

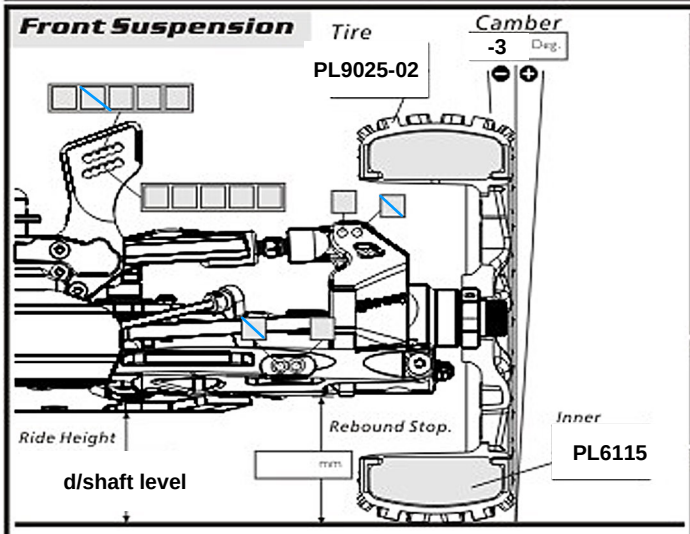

Front Toe angle

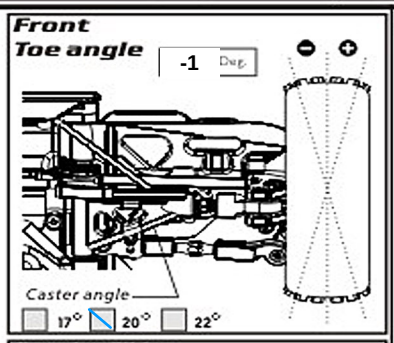

Steering Slider

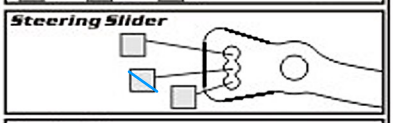

Anti-roll bar

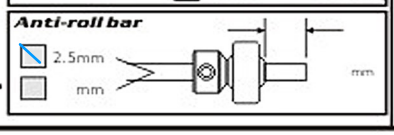

Front Shock

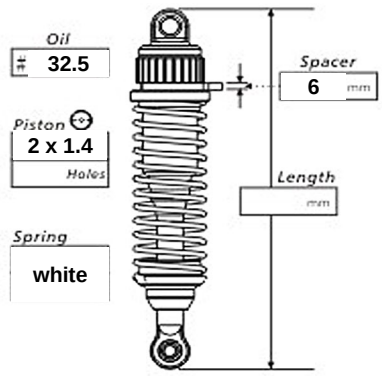

Rear Suspension

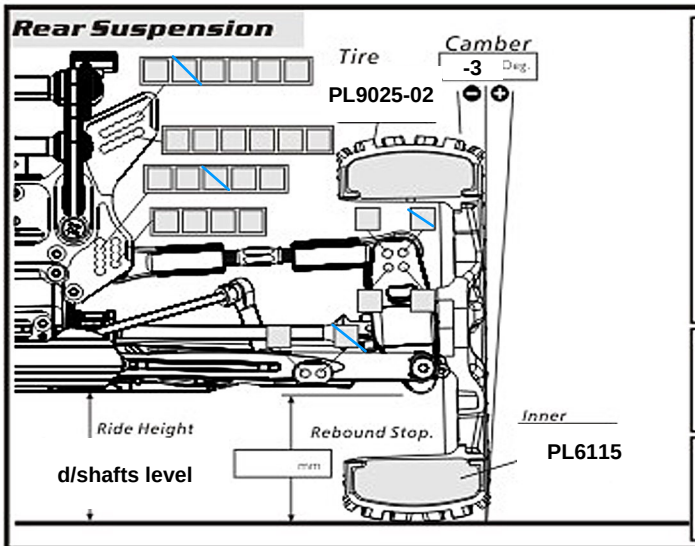

Rear Toe angle

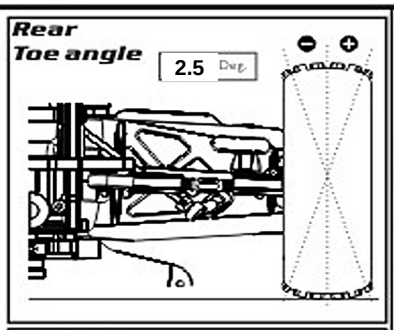

Wing Position

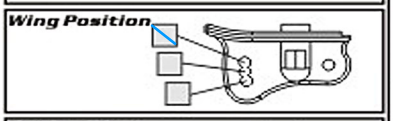

Anti-roll bar

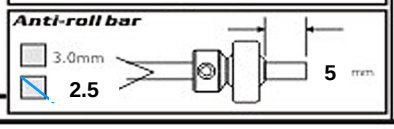

Rear Shock

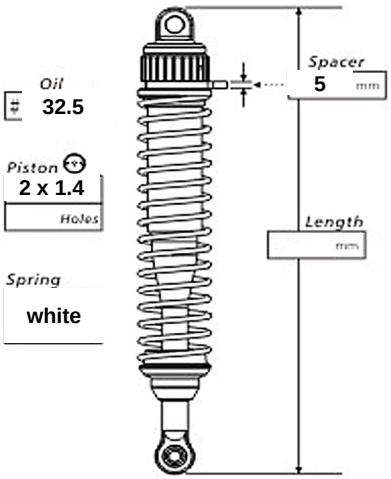

Notes:

Car very good. Fastest lap of meeting.

Resul	Position	Laps	Time	Fastest Lap
Run				Lap
Qualifier				Lap
				Lap
				Lap
				Lap
Main#				Lap

HYPER 8

HOBAO RACING